LIST OF SYMBOLS, ABBREVIATIONS AND NOMENCLATURE

A1'A2' etc	Horizontal dimension defining upstream quadrant of the crest
B1'B2' etc	Vertical dimension defining upstream quadrant of the crest
B	Total length of side weir
B_b	Length of water between inlet and outlet
B_i	Length of water at inlet
B_o	Length of water at outlet
C	Non-dimensional discharge coefficient
Ca	Discharge coefficient as affected by downstream apron
Cb	Discharge coefficient for spillways with breast wall
Cd	Discharge coefficient for design head, $C_d = 2/3\ 2g\ C$
Cg	Discharge coefficient for flow under the gate
Ch	Discharge coefficient for head *H* (other than -design head)
Cs	Discharge coefficient as affected by submergence of the crest
D	Net opening for the spillway with breast wall
g	Acceleration due to gravity
H	Head of overflow
Ha	Head due to velocity of approach
Hc	Head from reservoir level up to the centerline of the opening of gate
Hd	Design head
Ht	Total upstream head
K1'K2' etc	Variable parameters
Ka	Abutment contraction coefficient
Kp	Pier contraction co-efficient
L	Effective length of overflow crest
L'	Net length of overflow crest (excluding thickness of pier)
M	Riser of the crest
m	Meter
m^3	Cubic meter
N	Number of piers
n1'n2' etc	Variable parameters
P	Height of the spillway crest measured from the river bed

Q	Discharge
q	Discharge per unit length of the spillway
r	Ratio of discharge of pkw to discharge of ogee weir
R	Radius of abutment
Rg	Radius of crest gate
s	Second
T_s	Thickness of sidewall of pkw
V	Velocity of water flow
W_i	Width of inlet key
W_o	Width of outlet key
X'X1'X2',	Co-ordinates of the profile
Y'Y1'Y2'	Co-ordinates of the profile

LIST OF FIGURES

Figure No	Figure Description	Page No
2.1	Flow over Ogee weir	6
2.2	Flow over a thin weir	6
2.3	The water has been replaced by solid boundary	7
2.4	The geometric elements of an ogee spillway	7
2.5	Weir Parameters on Sharp Crested Linear Weir	8
3.1	Piano key weir	10
3.2	PK weir geometry parameters	11
3.3	Fundamental parameters on an entire PKW-3D-view	12
6.1	Experimental model of flume with OGEE WEIR	20
7.3.1	Ogee weir	23
7.3.2	Head-Discharge Curve	24
7.3.3	Head-C_d Curve	25
7.4.1.	PKW	25
7.4.2	Scale measurement	26
7.4.3	Head-Discharge Curve	27
7.4.4	Evaluation of Head-Discharge relations	28
7.4.5	Comparison between discharges of Ogee Weir and PK weir	29

TABLE OF CONTENTS

Acknowledgement i

Abstract ii

List of symbols **iv**

List of Figures vi

Table of Contents viii

Chapter: 1 INTRODUCTION **1**

1.1 General 1

1.2 Classification of weir 1

1.2.1 According to the shape of opening 1

1.2.2 According to the shape of the crest 1

Chapter: 2 OGEE WEIR **4**

2.1 High Overflow Spillway 4

2.2 Head 4

2.3 Design Head 4

2.4 Ogee Profile for free overflow 4

2.4.1 Shape of the profile 4

2.5 Ogee Spillway Discharge Equation 8

Chapter: 3 PIANO KEY WEIR **9**

3.1 Introduction 9

3.2 Parametric study 12

Chapter: 4 OBJECTIVES OF STUDY **13**

Chapter: 5 LITERATURE RIVIEW **14**

5.1 General 14

5.2 Ogee weir 14

5.3 Piano key weir 15

Chapter: 6 METHODOLOGY AND EXPERIMENTAL PROGRAMME **18**

6.1 Data analysis 18

6.2 First stage of experimental work 19

6.3 Second stage of experimental work 19

6.4 Experimental setup 19

6.5 Piano key weir model classification 20

Chapter: 7 EXPERIMENTAL RESULTS AND DISCUSSION **21**

7.1 General 21

7.2 Data analysis 21

7.3 First Phase Model Experiments 22

7.4 Second Phase Model Experiments 25

8. CONCLUSION **30**

9. FUTURE SCOPE OF WORK **31**

9.1 **PKW** research work carried out by IIT 31

PROJECT PHOTOS **32**

1. INTRODUCTION

1.1 GENERAL

A weir is built across a river (or stream) in order to raise level of water on the upstream side and to allow the excess water to flow over its entire length to the downstream side. Thus a weir is similar to a small dam constructed across river, with the difference that whereas in the case of a dam excess water flows to the downstream side, only through a small portion called spillway, the same in the case of a weir flow over its entire length. Spillways represent a substantial portion of total project costs and they play a major role in ensuring safety.

1.2 CLASSIFICATION OF WEIR

Weirs may be classified according to the shape of opening, the shape of crest, the effect of sides on the issuing the nappe and the discharge condition.

1.2.1 According to the shape of opening,

- Rectangular weir: A weir with a rectangular notch at top for measurement of water flow in open channel.
- Triangular weir: V-notch weir is a triangular channel section, used to measure small discharge value.
- Trapezoidal weir: A contracted weir of trapezoidal shape in which the sides of the notch are given a slope of 1 horizontal to 4 vertical.

1.2.2 According to the shape of the crest

- Sharp crested weir: A sharp-crested weir allows the water to fall cleanly away from the weir.
- Narrow crested weir: In this type of river crest of weir small as compare to broad crested weir.
- Broad crested weir: A broad-crested weir is a flat-crested structure, with a long crest compared to the flow thickness
- Ogee shaped weir: Ogee shape weir provide simple curve at crest.

With rising demands for increased reservoir water storage, increasing magnitudes of probable maximum storm events, and the continuing need for dam safety, many existing spillways are currently undersized and in need of replacement. Reservoir spillways typically use weirs,

gated or non-gated, as the flow control structure. In the weir head-discharge relationship, Eq. (a), the weir's discharge capacity (Q) is proportional to the weir length (L).

$$Q = C_d \frac{2}{3} \sqrt{2g}\, L\, H_t^{3/2} \quad \ldots\ldots\ldots\ldots\ldots\ldots\ldots\ldots\ldots\ldots\ldots\ldots\ldots\ldots (1.1)$$

In Eq. (1.1), Q is the discharge, C_d is the discharge coefficient, g is the gravitational constant, L is the crest length, and H_t is the total upstream head [piezometric head (H) measured relative to the weir crest plus velocity head ($V^2/2g$)].

In general, there are three methods for increasing the discharge efficiency (as quantified by the discharge coefficient (C_d) of the standard weir equation) of an uncontrolled weir spillway when limited by a maximum pool elevation

(i) Increasing the width of the spillway,
(ii) Lowering the spillway crest elevation, and/or
(iii) Increase L within the existing spillway footprint by replacing the existing linear weir with a non-linear weir.

Increasing L of a linear weir, and consequently the discharge channel width, is often impractical due the dam geometry and/or economic reasons. In addition to likely being economically unfeasible, lowering the crest elevation (i.e., lowering the entire spillway structure) decreases the normal pool elevation, reducing the amount of available water storage. So the use of non-linear weirs represents a viable and generally accepted option.

PKW spillways are an innovative technical-economical optimization of traditional labyrinth weir. They were recently developed by **Lemperiere** & **ouamane** in 2003. PKW appear to be performing solution to improve discharge capacity from both technical and economical aspects. **PKW** appear to be interesting option to increase dam discharge capacity by providing high specific flow rates. Another use to increase the storage of reservoir while keeping the maximum water level constant.

Elecricite de France (EDF) decided to build first PKW spillway at **Gourlour** dam in **France** in 2006. Due good feedback in France more four units of **PKW** built from 2008 to 2011 and couples of other PKW units are planned in the near future in **France** and **worldwide.**

In India, experimental results and physical modeling tests of evacuation system of **Sawara Kuddu Hydro Electric Project 110 MW** located in lower **Himalayan** mountain ranges with

Piano Key Weir and the energy dissipation structure, this research and development managed by **IIT Roorkee**.

In the current project we are going to compare ogee weir and piano key weir with their discharge capacity by working prototype model made from acrylic.

2. OGEE WEIR

Spillway which has its overflow profile conforming, as nearly as possible, to the profile of the lower nappe of a ventilated jet of water flowing over a sharp crested weir (free overflow) or through an orifice (spillway with breast wall).

2.1 HIGH OVERFLOW SPILLWAY

Overflow spillways are classified as high and low depending on whether the ratio of the height of the spillway crest measured from the river bed to the design head is greater than and equal to or less than 1.33 respectively. In the case of high overflow spillways the velocity of approach head may be considered negligible.

2.2 HEAD

The head is the distance measured vertically from the water surface (upstream commencement of drawdown) to the crest elevation. It also includes head velocity of approach.

2.3 DESIGN HEAD

The design head is that value of head for which the ogee profile is designed.

2.4 OGEE PROFILE FOR FREE OVERFLOW

2.4.1 Shape of the profile

The ogee profile consists of two quadrants, the upstream quadrant and the downstream quadrant. Once the design head H_d of the spillway is fixed, the crest geometry may easily be evaluated. The recommended shape is based on detailed observations of the lower nappe profile of a fully ventilated thin-plate weir. Such a profile would generally result in atmospheric pressure along the entire spillway surface at design head H_d. For head lower than H_d, the pressure would be higher than atmospheric and for higher heads, sub-atmospheric pressure would result.

The ogee profile is divided in three groups:

a) Spillways with vertical upstream face,

b) Spillways with sloping upstream face, and

c) Spillways with crest offsets and risers.

Spillways with vertical upstream face

The upstream quadrant of the crest may conform to the ellipse**:**

As per IS 6934 (second revision) Doc.WRD 9(570) 2010 clause No. 4.1.3.1

$$\frac{X1^2}{A_1^2} + \frac{Y1^2}{B_1^2} = 1 \quad \text{.....(2.1)}$$

Downstream profile

The downstream profile of the crest may conform to the equation:

As per IS 6934 (second revision) Doc.WRD 9(570) 2010 Cl. No. 4.1.3.2

$$X_2^{1.85} = K_2 \, H_d^{0.85} \, Y_2 \quad \text{..... (2.2)}$$

The magnitude of K2, is determined with reference to the parameter P/H_d from the graphs

(Given in Fig. 1. IS 6934 (second revision) Doc.WRD 9(570) 2010)

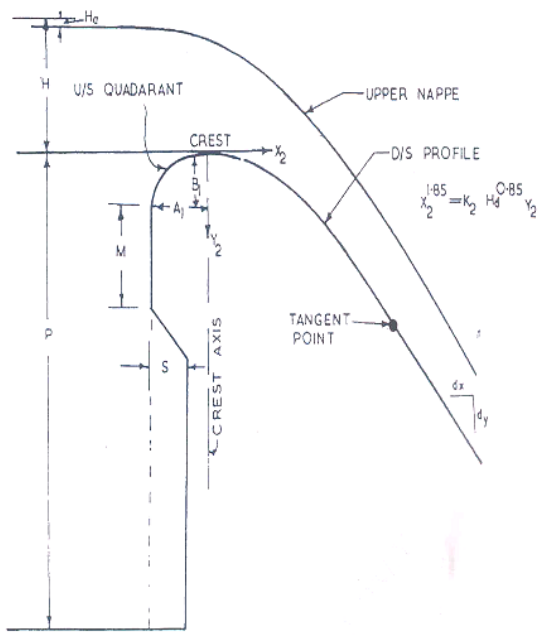

FIGURE 2.1 FLOW OVER OGEE WEIR

This type of spillway is the most common type adopted in the field. It divides naturally into three zones. Crest spillway face and the toe. The concept evolves from replacing the lower nappe of the flow over thin plate weir by solid boundary shown in Fig. 2.2 & Fig. 2.3

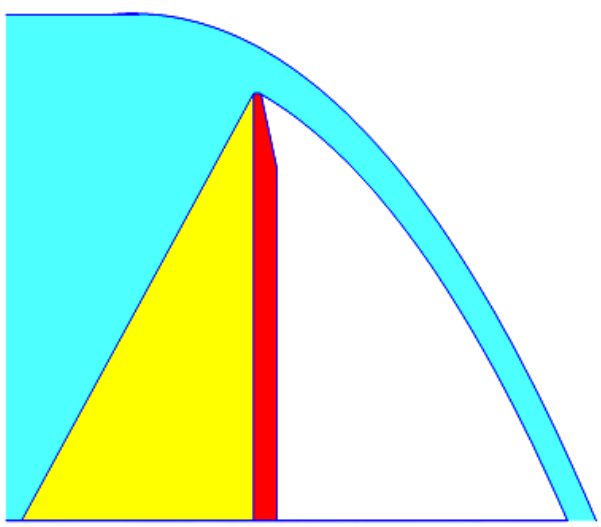

FIGURE 2.2 FLOW OVER A THIN WEIR

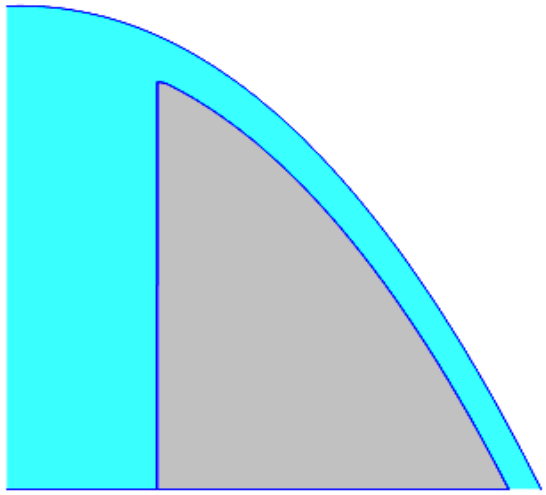

FIGURE 2.3 THE WATER HAS BEEN REPLACED BY SOLID BOUNDARY

The geometric elements of an ogee spillway are shown in Fig. 2.4.

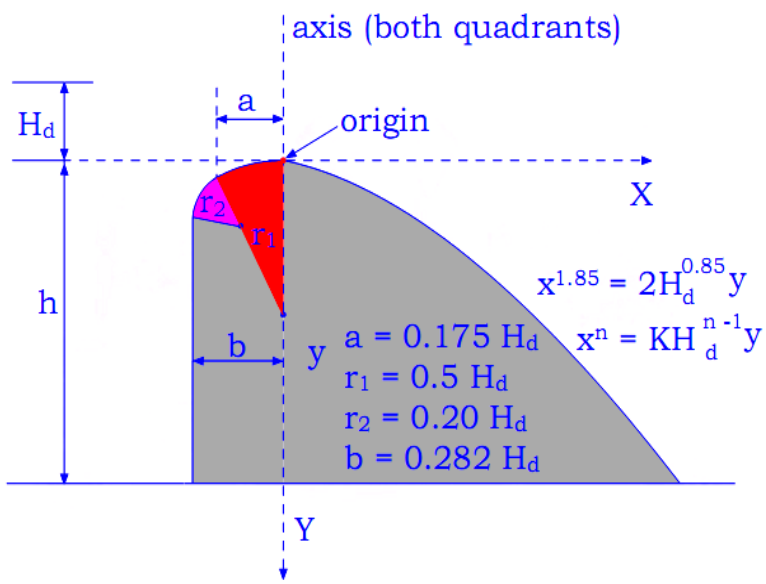

FIGURE 2.4 THE GEOMETRIC ELEMENTS OF AN OGEE SPILLWAY

2.5 OGEE SPILLWAY DISCHARGE EQEATION

The general equation for discharge is given by

$$Q = C_d \frac{2}{3} \sqrt{2g}\, L\, H_t^{3/2} \quad \text{.....(2.3)}$$

in which Q is the total discharge; L is the crest width; H_t is the total head upstream from the crest; g is the gravitational constant; and C_d is the discharge coefficient. It may be noted that H_t, the total head, includes the velocity head. Generally, this requires an Iterative solution technique as the velocity head is unknown, as it depends on flow rate which is to be calculated. However, as the velocity head is generally small, the equation converges quickly.

With rising demands for increased reservoir water storage, increasing magnitudes of probable maximum storm events, and the continuing need for dam safety, many existing spillways are currently undersized and in need of replacement. Piezometric head (H) measured relative to the weir crest plus velocity head ($V^2/2g$). H and H_t parameters are shown in Fig.2.5.

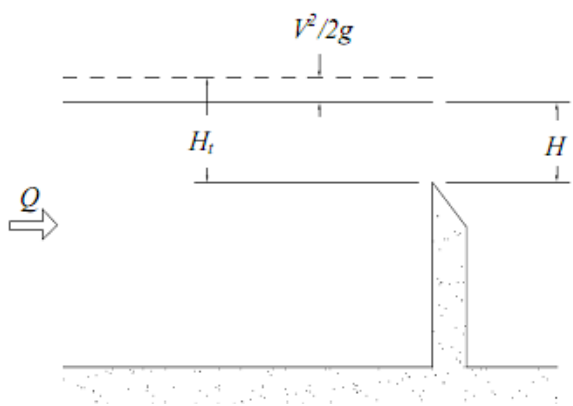

FIGURE 2.5 WEIR PARAMETERS ON SHARP CRESTED LINEAR WEIR

3. PIANO KEY WEIR

3.1 INTRODUCTION

A new concept of a non linear weir has been proposed with a new shape like black and white Piano keys when viewed in plan, this new concept was called the Piano Key Weir (**PKW**) (Lempérière and Ouamane, 2003). This innovative design solves most of the problem presented by the original linear weir, and is also more efficient. Compared with the traditional linear weir: A piano key (PK) weir was developed specifically for smaller control structure footprint applications. As shown in Fig. 3.1.

Main differences of PK weir designs, relative to traditional linear weir designs are:

- Plan view of the Piano Key Weir is not trapezoidal, but rectangular
- Vertical walls founded on a flat area are replaced by lateral vertical walls and sloping slabs upstream and downstream of the crest. These slabs are partially a cantilever structure, upstream and downstream. Therefore the overall structure is self balanced
- The Piano Key Weir can be positioned on the top of the crest of new or existing gravity dams. Application can cover a wide range of specific flows, from 3 to 1000 m3/s/ml.
- Piano Key Weir can increase by a factor about 1.50 to 4.00 times than the specific discharge capacity of straight sharp crested weir.
- From a structural point of view, Piano Key Weir is extremely hyper-static structures, which are solid and simple.
- Where the available footprint for the control structure is limited, the sloped floors cantilever the cycles beyond the spillway footprint providing the PK weir with a longer crest length relative to traditional labyrinth weir designs with the same footprint.

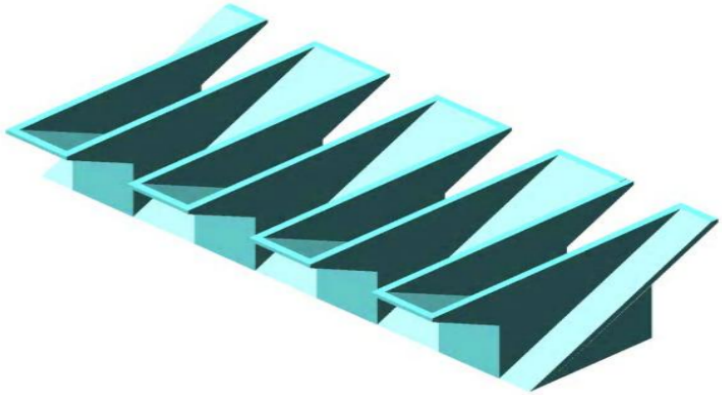

FIGURE 3.1 PIANO KEY WEIR

A Piano Key Weir has advantages compared with the straight overflow weir and the standard ogee crest. The total length of the Piano Key Weir is typically three to seven times the spillway width. Its discharging capacity varies with head and is typically about twice that of a straight sharp crested weir or overflow crest of the same width. Piano Key Weir can be used to increase outlet capacity for a given spillway crest elevation and length or to increase storage by raising the crest while maintaining spillway capacity.

The flow downstream of a Piano Key Weir is considerably aerated as per a system of air injection. Consequently the risks of erosion or cavitations are considerably reduced and the cost of new downstream structures or the maintenance of existing ones is reduced. To avoid vibrations in Piano Key Weir, it is advisable to aerate the nappe.

The Piano Key Weir is particularly well suited for cases where the length of the structure has to be restricted or for the rehabilitation of existing spillways. **A Piano Key Weir can pass large discharge at a relatively low head.** Its advantages include relatively low construction and maintenance costs and more reliable operation, compared with gated spillways. In addition for a given maximum operation head, a Piano Key Weir can be an economical alternative in terms of dam crest elevation and reservoir storage volume. The ability of the Piano Key Weir to pass large flows at comparatively low heads has led to many applications. The primary use of Piano Key Weir has been as a spillway for dams. It is particularly suited for use where the spillway width is restricted or where the flood surcharge space is limited. Along with the design, Lempérière (2009) gives Eq. (3.1) as an estimate for the PK weir head-discharge relationship $\mathbf{q = 4.3\ h\ \sqrt{P_m}}$

In Eq. (3.1), P_m is a representative weir height measured in meters, as shown in Fig.3.2 below, h is head (no statement is given as to if this is the piezometric, or total head) over the weir crest measured in meters within the range of 0.4Pm to 2Pm , and q is the weir discharge per unit width of spillway channel in cubic meters per second per meter of weir width. The form of Eq. (3.1) (linear, q œ h) is significantly different from the standard weir equation [Eq. (1.1)] (nonlinear, Q œ $Ht^{3/2}$). In Eq. (3.1), the constant 4.3, which is representative of a discharge coefficient, remains constant, as opposed to the varying discharge coefficient as in the standard weir equation (C_d) [Eq. (1.1)].

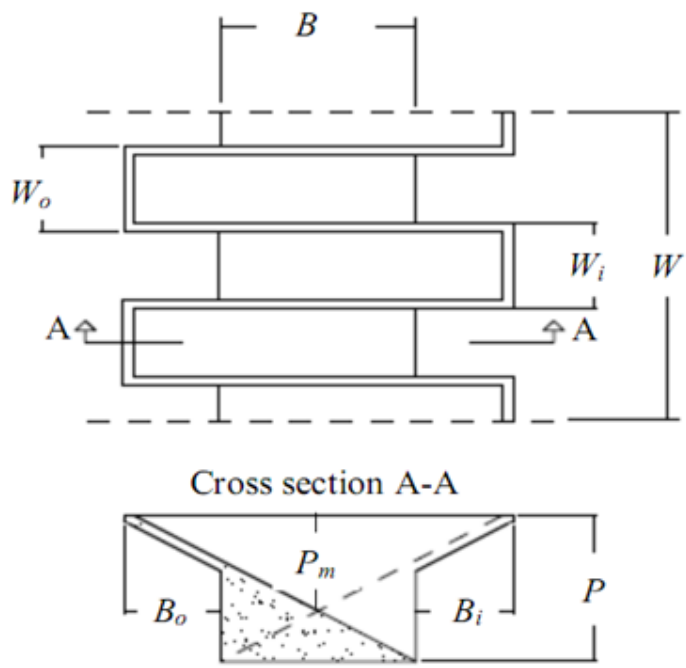

FIGURE 3.2 GENERAL PARAMETER

In an effort to develop a better understanding of the differences in head-discharge relationships or discharge efficiencies of PK and Ogee weirs, as well as develop a better understanding of the influences of the various PK weir geometric parameters on discharge efficiency, the following study was undertaken.

3.2 PARAMETRIC STUDY

The total discharge over a PKW is a function of several parameters which can be summarized as follows:

Q=f(ρ, g, ν, H, L, P, Pd, W, Wi, Wo, B, Ts, R, α)

In Equation 1, the fluid is characterized by its density ρ and the kinematic viscosity ν, *g* is the acceleration of gravity, and *H* is the total upstream hydraulic head. The other parameters are related to the geometry of the PKW. *L* is the total developed crest length, *P* is the total height of the PKW, *Pd* is the dam height, *W* is the total width of the PKW, *Wi* and *Wo* are the widths of the inlet and outlet keys, *B* is the length of the side weir, α is the angle between the inlet/outlet key crest and the side weir of the PKW, *Ts* is the sidewall thickness and *R* is the radius of crest curvature. With exception of α, *Pd* and *R*, the other geometric parameters are shown in Figure

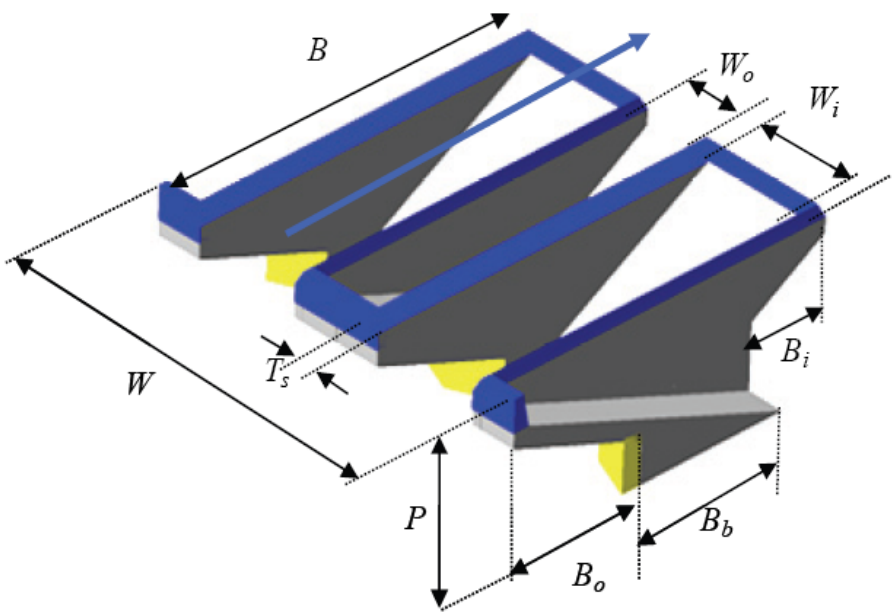

FIGURE 3.3 FUNDAMENTAL PARAMETERS ON AN ENTIRE PKW – 3D-VIEW

4. OBJECTIVES OF STUDY

Keeping in view the relatively reported better performance of Piano Key Weirs in comparison to Ogee weir and PK weirs, following objectives are considered for the present study.

To perform experimental study on a Piano Key weir model and Ogee weir at different discharges so as to determine flow characteristics like

(a) The head discharge relationship.

(b) Comparison between discharge efficiency or PK Weir and Ogee Weir.

With the above objectives in view, the relevant details of the experimental programmed will be done.

.

5. LITERATURE RIVIEW

5.1 GENERAL

Considering the importance of Piano Key Weir in comparison to other type of weirs, present chapter looks into available practices with particular reference to Ogee weir/spillway. It also deals with review related to variation of Ogee weir discharge coefficient. Finally, it deals with very limited research work on Piano Key Weir to emphasize the need for the present study.

5.2 OGEE WEIR

Bruce M. Savage[1]and Michael C. Johnson,[2](2000)

Flow over Ogee spillway: Physical and numerical model case study.

This study, in conjunction with the many previous studies, shows that, for uncontrolled flow over an ogee spillway, numerical tools are sufficiently advanced to calculate discharge and pressures on the spillway. New numerical techniques pro-vide practicing engineers with an additional tool in the design or analysis of spillways. This tool may be very useful when reevaluating a dam for higher flows or improved hydrologic event flood calculations. It is apparent that, within the range tested, the numerical method has an improved accuracy over the design nomographs for flow rates and pressures. However, the increased accuracy does not dictate that this method is sufficient or necessarily required for any given case. It is believed that the accuracy required is a question that must be answered on an individual basis.

Michael C. Johnson, M.ASCE; and Bruce M. Savage, M.ASCE (2006)

Physical and Numerical Comparison of Flow over Ogee Spillway in the Presence of Tail water;

Data obtained from two physical models were compared to the results obtained from numerical model investigations of two ogee-crested spillways. In 2001, Savage and Johnson investigated ogee-crested spillways without the effect of tail water; the present study includes the influence of tail water on the spillway. The comparison showed that numerical modeling can accurately predict the rate of flow over the spillway and the pressure distribution on the spillway. The results of this study provide users of numerical models performance

information that can be used to aid them in determining which tool to use to effectively analyze dams and their associated spillways.

5.3 PIANO KEY WEIR

A.Ouamane and F. Lempérière (2000)

A new shape of nonrectilinear weir baptized Piano Keys Weir (P.K.Weir) was developed by Hydrocoop-France in collaboration with the Laboratory Hydraulic Developments and Environment of the University of BISKRA (ALGERIA). This new type of weir has the advantage to be applied to the earth dams and in reduced section of dams existing or new weights. P.K.Weir allows the evacuation of the specific flows up to 100 m3/s/m, while multiplying at least by three the flow of a Creager weir, its construction is simple and easy and can be carried out by local resources of each country. The P.K.Weir will reduce considerably the cost of the majority of the new dams and will allow to improve at the same time, the capacity of evacuation of the spillway and the storage capacity of the reservoir of the existing dams.

Lempérière and Ouamane (2003)

The PK weir was originally developed by Blanc of the University of Briska (Algeria), and Lempérière of Hydrocoop(France), to facilitate and improve the performance of labyrinth-type weirs installed on smaller spillway footprints. Over 100 PK weir model studies have been completed since 2000 (Lempérière 2009), although data are not available for all studies. Construction of the first prototype PK weir, Goulours dam in France, was completed in 2006; construction of the second prototype PK weir, Saint-Marc dam in France, was completed in 2008 (Laugier 2007, 2009).

F. Laugier (2007)

PK Weirs are an innovative solution to increase dams discharge capacity for flood mitigation issues. They are simple structure to design and economical to built. The main advantages are that: PK Weir can be adapted to the crest of many existing dams, especially gravity ones. As free-flow spillway, PK Weir maintenance is cheap and operation is automatic and safe: reliability and no risk of uncontrolled downstream flow. Goulours case showed that the preliminary design is quick and consistent. PK Weir deserves to be included in the feasibility studies whereby different technical solutions are compared. It is also possible to envisage increasing the reservoir level of dams controlled by a free-flow spillway. Other PK Weir

projects are currently being studied at EDF to increase the discharge capacity of dams. Saint-Marc PK Weirs might be built in 2008 and two other ones should be built in 2009. However, we believe that a deeper global theoretical approach of PK Weir hydraulic still needs to be studied. Additional physical tests should also be carried out to try and specify a set of typical optimized PK Weir standard layouts according to project requirements.

Dr. Nayan Sharma (2008)

Piano Key Weir with presence of ramp and two sides overhanging provides a higher discharge under same head when compared with other Piano Key Weir configurations with lesser number of ramps and/or over-hangings. At higher range of h/p, nappe formation occurs due to hydraulic effect triggered by upstream Piano Key shape between two elements. At medium range of h/p, depths of nappe formation that occur from upstream direction of elements are smaller than higher discharge due to effect of Piano key shape. At lower h/p value the sensitivity of crest height parameter 'p' is clearly discernible. The lower value of 'p' gives higher magnitude of 'r' in the lower range of h/p ratio. Energy loss behavior in downstream of Piano Key Weir is sufficient with providing steps in downstream of Piano Key Weir.

Ricky M. Anderson and Blake P. Tullis (2011)

• Limitations to the design proposed by Lempérière (2009) include that it produces a line drawing which does not include all parameters needed in design (i.e., crest shape, wall thickness, shape of weir beneath upstream overhangs).

• Eq. $q=4.3\sqrt{p}$ is geometry dependant as a result of the constant or coefficient (4.3), and gives an estimate of discharge with an average percent error of 1.98% and maximum percent error of 3.69%, given the piezometric head is used rather than the total head.

Er. Vinod D. Ujeniya (2012)

Comparing a P.K.Weir with Ogee weir reveals that the PK weir has a significantly better discharge efficiency than Ogee weir. The piano keys weir (P.K.Weir) represents an effective solution for the increase in the storage capacity and the capacity of evacuation of floods of the majority of the existing dams. It can be an economic solution for the new dams. This new type of weir is characterized by:

- A simple geometrical configuration which allows the use of the prefabricated units,

- An operation similar at the weirs with free flow but much more effective,

- Multiply at least by four the specific flow of a standard weir,

- Reduced considerably the cost of the majority of

The new dams and guaranteed their safety.

In the case of the recent developed PK weirs even such generalized performance curves are not yet available. More systematic laboratory studies on physical models are still needed as well as alternative parametric approaches.

6. METHODOLOGY AND EXPERIMENTAL PROGRAMME

Considering the fact that Piano Key Weir of different shapes are to be used in field conditions, the objective of these experiments is to make comparison between the Piano Key Weir and Ogee weir discharge capacity at different head will be achieved. Also, other parameters are taken in different combinations for getting optimum configuration of Piano Key Weir for better performance

6.1 DATA ANALYSIS

Some of the steps of the data analysis consist of the following

Calculation of discharge through Ogee weir is made by the formula,

$$\mathbf{Q = C_d \frac{2}{3} \sqrt{2g}\ L\ H^{3/2}}$$

Where,

Q is the discharge through Ogee weir,

H is the head over the crest,

C_d is coefficient of discharge,

L is the width of channel.

V-notch is used to measure the discharge.

The formula used for discharge of V-notch is

$$\mathbf{Q = 8/15 \times C_d \times \tan\phi/2 \times \sqrt{2g} \times h^{2.5}}$$

Difference of Piano Key Weir discharge and Ogee weir discharge (ΔQ) is obtained as

$$\mathbf{\Delta Q = Q_{pk} - Q_{ogee}}$$

Where,

Q_{PK} is the discharge through Piano Key Weir,

Q_{ogee} is the discharge through Ogee weir.

Ratio (r) of Piano Key Weir discharge and Ogee Weir discharge is

$$\mathbf{r = Q_{pk} / Q_{ogee}}$$

6.2 FIRST STAGE OF EXPERIMENTAL WORK

In the first stage of the experiment work, selected model of Ogee Weir will be used. The model will run for different nappe heights, discharges. Readings will be taken and analyze the data to find C_d of ogee weir by using standard formula,

$$Q = C_d \frac{2}{3} \sqrt{2g}\, L\, H^{3/2}$$

Than prepare graph head v/s discharge.

6.3 SECOND STAGE OF EXPERIMENTIAL WORK

In the second stage of the experiment work, selected model of PK Weir has been used. The dimensions of PK Weir model will prepared from 3mm acrylic thick sheet the dimension of the model is selected as per recommended by **Ricky M. Anderson and Blake P. Tullis** . The model will run for different nappe heights, discharges.

After completion of first and second stage of experimental work we will make the comparison of discharge capacity of ogee weir and PKW.

6.4 EXPERIMENTAL SETUP

The experimental set-up consists of the following flow measuring instruments and water infrastructure.

Constant head tank

An overflowing tank with 500 liters. Capacity will installed at the upstream head-end to ensure the supply of steady discharge into the experimental flume by 60 mm dia out let pipe with regulating valve to control the discharge in to flume.

Flume

Rectangular flume measuring 2.5m in length, 0.25m wide and 0.35m depth will used for passage of water from upstream head to the PK Weir installed in the downstream end. Acrylic flume sidewalls facilitated visual observations. Water enters the flume through the head box containing a flow-distributing a perforated wall (to improve approach flow uniformity) and a floating surface wave suppressor.

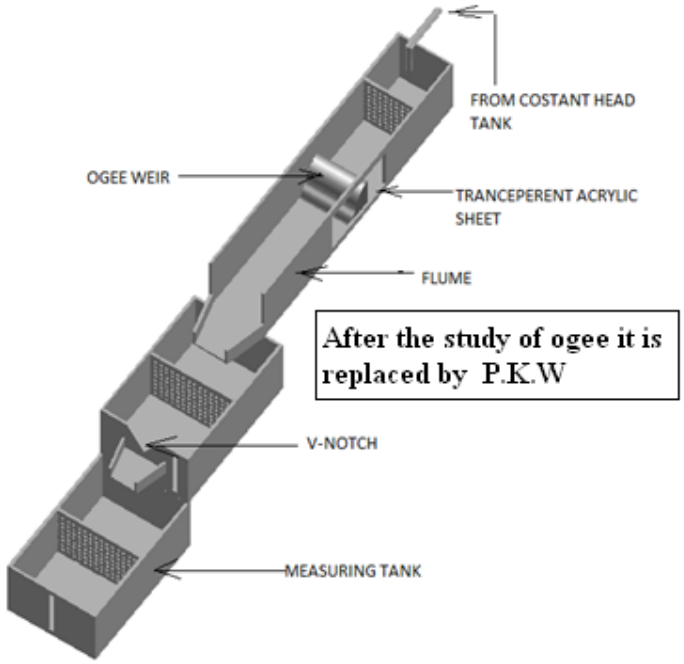

FIGURE 6.1 EXPERIMENTAL MODEL OF FLUME WITH PIANO KEY WEIR

Pipe network and pump

From downstream of V-notch to upstream of P. K. Weir, the flow network is connected through a pipe of (60 mm dia.) system. 3 H.P. pump is connected to the pipe network for recirculation of water from the collecting tank.

6.5 PIANO KEY WEIR Model classification

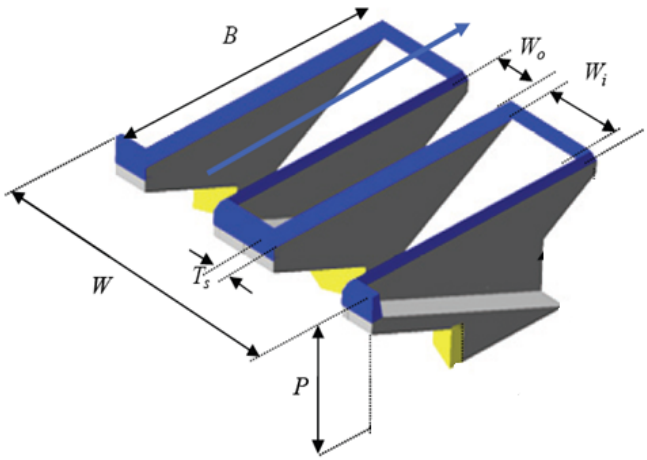

DIMENTIONS OF **PKW**	
Width of piano key model (W)	250mm
Length of piano key model (B)	300mm
Height of piano key model (P)	175mm
width of outlet key (W_o)	32mm
width of inlet key (Wi)	26mm
Thickness of acrylic sheet (Ts)	3mm

7.EXPERIMENTAL RESULTS AND DISCUSSION

7.1 GENERAL

Comparison between the Piano Key Weir and Ogee weir discharge capacity at different head could be achieved. Also, other parameters are taken in different combinations for getting optimum configuration of Piano Key Weir for better performance. This chapter presents the experimental data processing of all these model results.

7.2 DATA ANALYSIS

Some of the steps of the data analysis consist of the following

Calculation of discharge through Ogee weir is made by the formula,

$$\mathbf{Q = C_d \frac{2}{3} \sqrt{2g}\ L\ H^{3/2}} \qquad (7.1)$$

Where,

Q is the discharge through Ogee weir,

H is the head over the crest,

C_d is coefficient of discharge,

L is the width of channel.

V-notch: It was used for the measurement of discharge through the P. K. Weir. 60 degree V-notch was used for the discharge measurement. The V-Notch is shown diagrammatically in Fig. 3.1. The basic head-discharge equation for a V-notch weir is

$$\mathbf{Q = 8/15 \times C_d \times \tan\phi/2 \times \sqrt{2g} \times h^{2.5}} \qquad (7.2)$$

Table no.7.2.1 Determination of C_d of V -Notch

HEIGHT (cm)	TIME (sec)	DISCHARGE (Q) m^3/sec	AVERAGE (Q) m^3/sec	C_d
8 cm	53.59	0.0006656	0.0006796	0.7345
13 cm	84.65	0.0006847		
18 cm	116.54	0.00068869		

Area of measuring tank = 0.534 × 0.83 = 0.4458 m^2

$$Q_{actual} = \frac{\text{Area of measuring tank} \times \text{height of water}}{\text{Time}}$$

Difference of Piano Key Weir discharge and Ogee weir discharge (ΔQ) is obtained as

$$\Delta Q = Q_{pk} - Q_{ogee}$$

where,

Q_{PK} is the discharge through Piano Key Weir,

Q_{ogee} is the discharge through Ogee weir.

Ratio (r) of Piano Key Weir discharge and Ogee Weir discharge is

$$r = Q_{pk} / Q_{ogee}$$

7.3 FIRST PHASE MODEL EXPERIMENTS

In the first phase of the experiment programme, selected model of Ogee Weir has been used. The model was run for different nappe heights, discharges. Running view of the model is shown in Figure no. 7.3.1 to 7.3.3 These photos depict the behavior of Ogee Weir.

Fig. 7.3.1 Ogee Weir

Table no. 7.3.1 Head and Discharge for ogee weir

Head on ogee weir (H) in mm	Head on V-Notch (h) in mm	Discharge ($Q = 8/15 \times C_d \times \tan\phi/2 \times \sqrt{2g} \times h^{2.5}$) in lits/sec
5.0	0.47	0.16
6.0	0.54	0.22
7.0	0.59	0.28
8.0	0.68	0.39
9.0	0.73	0.46
10.0	0.78	0.55

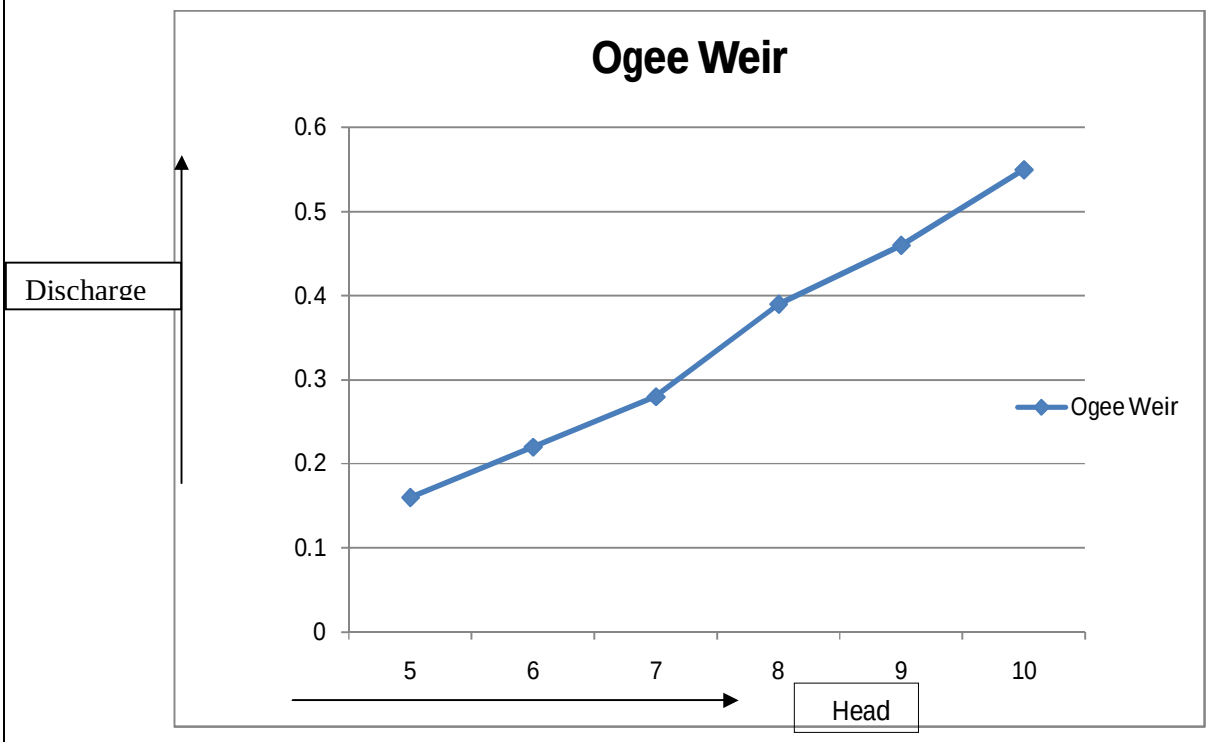

Figure 7.3.2 Head-Discharge Curve

Table no. 7.3.2 C_d Calculation for Ogee Weir

Head (H) in mm	Discharge ($Q=C_d - \frac{}{} L H^{3/2}$) in lits/sec	C_d
5.0	0.16	0.610
6.0	0.22	0.640
7.0	0.28	0.647
8.0	0.39	0.738
9.0	0.46	0.740
10.0	0.55	0.745

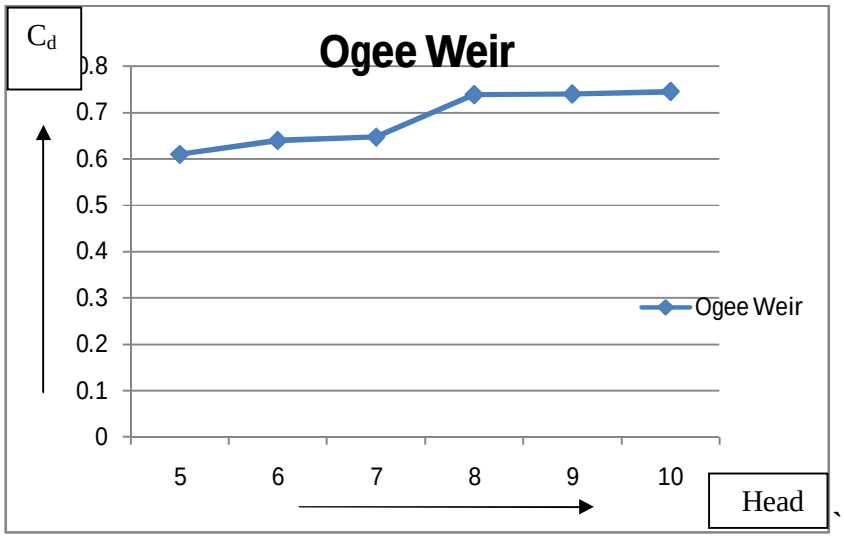

Figure 7.3.3 Head-C_d Curve

7.4 SECOND PHASE MODEL EXPERIMENTS

In second phase of model experiment we replace **PKW** in stand of **ogee weir** model as shown in fig. 7.4.1

Fig 7.4.1. PKW

7.4.2 scale measurement

Table 7.4.1 head –Discharge reading for PK weir

Head (H) in mm	Discharge (Q) in lits/sec
5.0	0.646
6.0	0.94
7.0	1.204
8.0	1.489
9.0	1.81
10.0	2.1

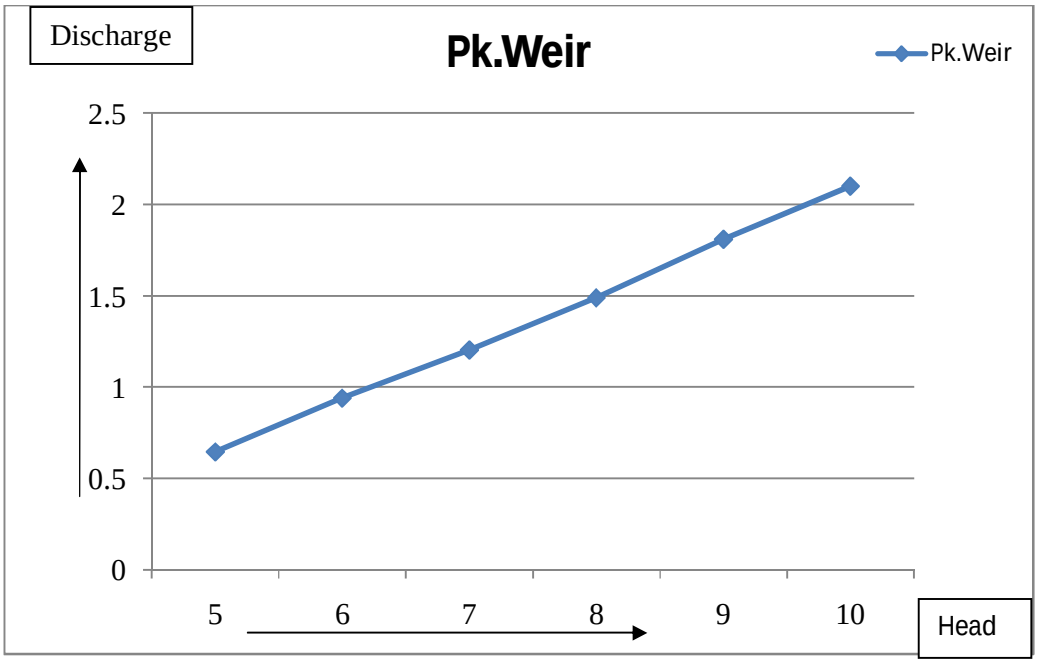

Figure 7.4.3 Head-Discharge Curve

Table 7.4.2 head –Discharge Relationship for PK weir (P_m=0.05m)

Head (H) in mm	Discharge (Q_{act}) in lits/sec	$Q_{th}=4.3H\sqrt{P_m}$
5.0	0.646	1.20
6.0	0.94	1.44
7.0	1.204	1.68
8.0	1.489	1.92
9.0	1.81	2.16
10.0	2.1	2.40

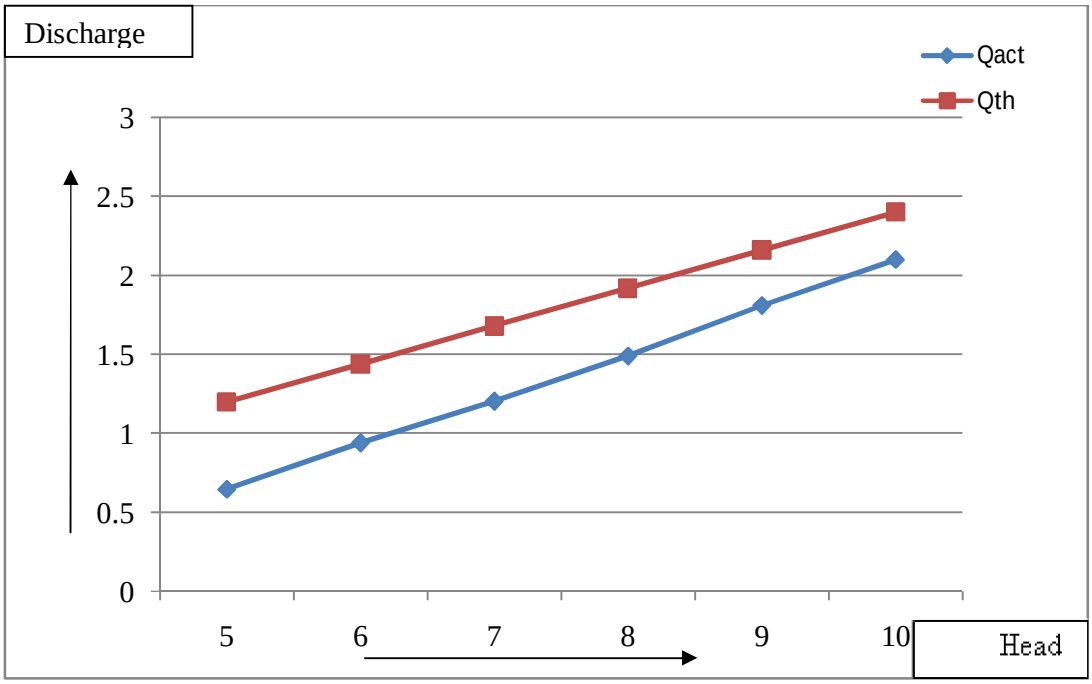

Figure 7.4.4 Evaluation of Head-Discharge relations

Table 7.4.3 Comparison between discharges of Ogee Weir and PK weir

Head on Crest (in mm)	Discharge (PK Weir) Q_{pk}(in lits/s)	Discharge (Ogee Weir) Q_{ogee} (in lits/s)	Increasing in discharge Q_{pk} - Q_{ogee}
5.0	0.646	0.18	0.466
6.0	0.94	0.22	0.72
7.0	1.204	0.28	0.924
8.0	1.489	0.39	1.09
9.0	1.81	0.44	1.43
10.0	2.1	0.55	1.55

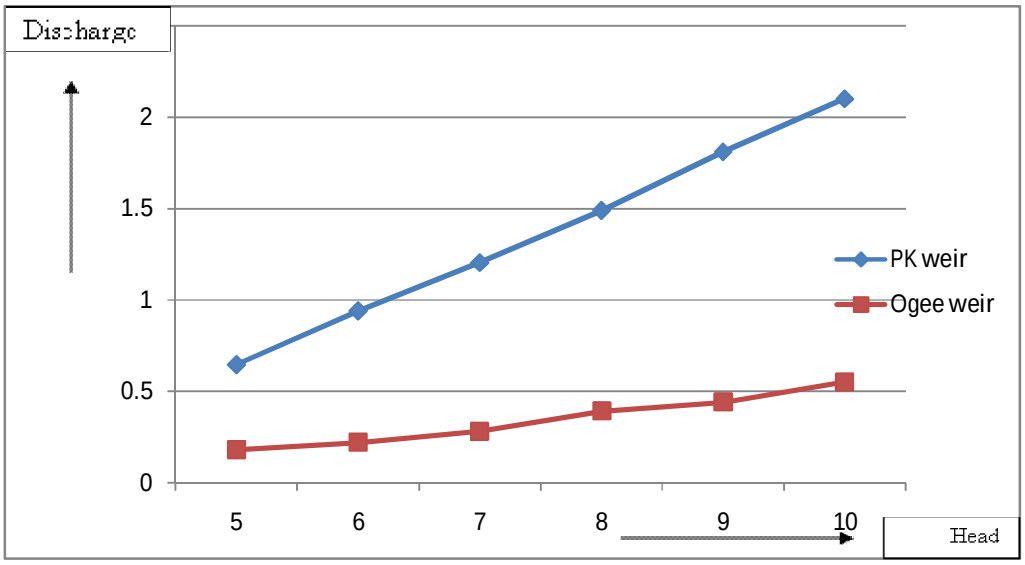

Figure 7.4.5 Comparison between discharges of Ogee Weir and PK weir

In this chapter, the experimental data collected in the present study towards evaluation of discharge efficiencies of Piano Key Weir and Ogee Weir are subjected to a analysis. It is found that Piano Key Weir discharge is higher than Ogee weir discharge for a given head.

8. CONCLUSION

Comparing a PK weir with Ogee weir reveals that the PK weir has a significantly better discharge efficiency than Ogee weir. To develop a better understanding of the effects of PK weir geometry on discharge efficiency, and to evaluate the hydraulic performance of a recommended PK weir design found in the literature (Lempérière 2009), laboratory-scale sectional models of PK weir geometries was built and tested. The piano keys weir (PK. Weir) represents an effective solution for the increase in the storage capacity and the capacity of evacuation of floods of the majority of the existing dams. It can be an economic solution for the new dams. Based on the results of this study, the following conclusions are made.

- Results from experiments show that discharge efficiency of PK Weir is 3.5 to 4.0 time more than that of Ogee Weir.
- An operation similar at the weirs with free flow but much more effective in **PKW** than **OGEE**
- Reduced considerably the cost of the majority of the new dams.

9. FUTURE SCOPE OF WORK

In the case of the recent developed PK weirs even such generalized performance curves & equations are not yet available. More systematic laboratory studies on physical models are still needed as well as alternative parametric approaches. Detailed flow characteristics over a typical Piano Key Weir model may be studied to provide an insight into the internal flow distribution characteristics through the different flow paths constituting the overall magnified crest length and the flow characteristics in the upstream of the Piano Key Weir. The model study is required for higher discharges. Detailed study on crest shape of Piano Key Weir is also required.

9.1 PKW RESEARCH WORK CARRIED OUT BY IIT ROORKEE

The Indian Institute of Technology (IIT), Roorkee has suggested the Orissa government to adopt the new Piano Key Weir Technology for in-stream storage of water in the **river Brahmani**.As per the proposal, 5 Piano Key Weir type barrages can be set up over about 100 km stretch of Brahmani between **Kharagprasad in Dhenkanal** district and **Jenapur in Jajpur** district. The barrages can be 25 kms apart from each other and the volume of the in-steam storage in low flow condition from one barrage is estimated to be about 10.15 million cubic metres.

Accordingly, the in-steam storage from 5 barrages is expected to be 50.75million cubic metres. The cost of the project will range from **Rs 40 crore** to **Rs 80 crore** each, depending on the site conditions. Basin on a preliminary study done at Kharagprasad, Prof. Narayan Sharma of IIT Roorkee stated that Piano Key Weir technology provides an increase in the stability of the dam structure as it can be placed on the top of most existing or new dam spillways.. **This new Piano Key Weir Technology has already been used by the Himachal Pradesh Power Corporation Ltd. (HPPCL) on Sawra Kuddu Barrage.** While the discharging capacity of a Piano Key spillway is much higher than a conventional Ogee spillway.This technology helps to reduce the reservoir sedimentation.

PROJECT PHOTOS